TOP ELEVATION OF ENVIROSIEVE 20m3

Envirosieve Sizing

Circumference	Length	m3 per meter	Number of ports
4.5	5	2	1
4.5	10	2	1
9	5	5	1
9	10	5	1
9	15	5	2
13.5	10	10	1
13.5	20	10	2
18	20	15	2
18	30	15	4
27	20	27	2
27	30	27	4

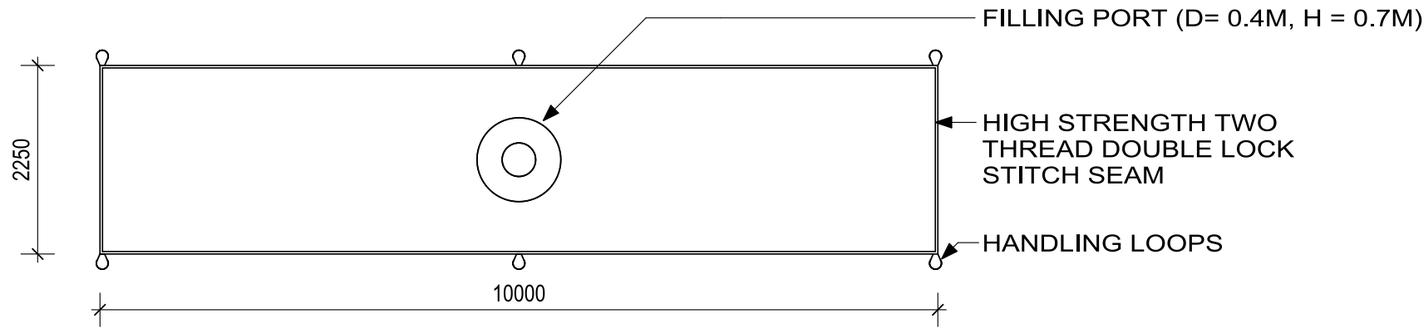

SIDE ELEVATION OF ENVIROSIEVE 20m3

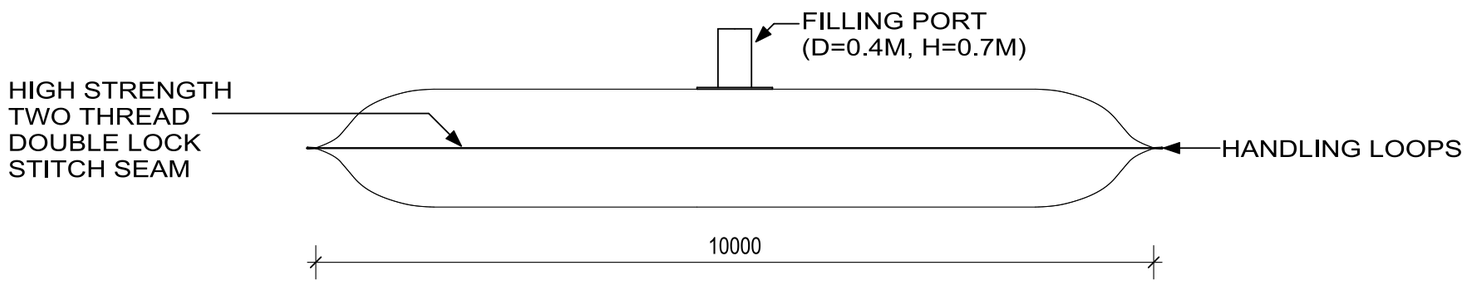

Advanced GeoSynthetic Solutions™

CIRTEX INDUSTRIES LTD | 16 QUEEN STREET | KOPU, THAMES
PO BOX 470 | THAMES 3540 | NEW ZEALAND
T +64 7 868 9909 F +64 7 868 3435 | INFO@CIRTEX.CO.NZ | CIRTEX.CO.NZ

Product: ENVIROSIEVE DEWATERING TUBE	Sheet Title: BASIC DETAILS	Drawing No:	© Cirtex Industries Ltd
Document Number:		Scale: 1:75 @ A3 Date:	ISO 9001 www.intlcert.com